Discrete Downlight - LL-1003-3W60-70L13W8-200

www.lumenall.com.au

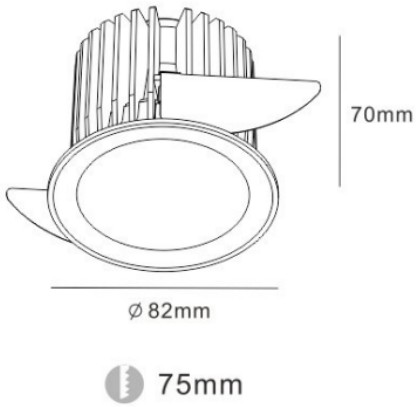

General Specifications

Product Name	Discrete Downlight
Product Range	Discrete Downlight
Product Code	LL-1003
IP Rating	IP44 Room side
Finish	white
Dimensions	70mm

Additional Specifications

Optics	60
Accessories	
Mounting	Recessed springs
Diffuser	Clear
UGR	<19

Supplier Information

Distributor	Lumenall Lighting
Contact Person	Sean Boxshall
Lead Time	4 - 12 Weeks
Warranty	5 Years

LED

Lamp Type	Cree CXA1507 COB
Power	13w
Colour Temperature	3000k
CRI	80
Colour Deviation	SDCM < 3
Absolute Luminous Flux	Upto 90lm-w
Lifespan	Calculated L70 - 60,000h Reported L70 > 39,000

Electronic Control Gear

Type	Lumenall Driver - Gen 2
Rating	200ma
Built in / Remote	Remote / Dimmable (Phase cut)
Power Factor	> 0.95

Additional Information

DALI options available, Tridonic driver.

@ Lumenall Lighting 2024